Status of the AUSTRON-Project

M. Schuster*, P. Bryant#

* Austron Office c/o Atominstitut der Österreichischen Universitäten, Schüttelstraße 115 A-1020 Wien, Austria
# The Austron Accelerator Study Group, CERN, CH-1211 Geneva 23, Switzerland

ABSTRACT

This paper discusses the status of the AUSTRON-project especially highlighting the progress made since the finalization of the feasibility study in November 1994.

1. Introduction

At the end of 1994 the feasibility study for the AUSTRON-project was completed [1]. Subsequently, studies concerning the losses inside the accelerator complex and a further increase of the proton beam power (up to 0.5 MW) have been made. Additionally, recent studies propose a target design for a 0.5 MW proton beam and a detailed study of the medical facility of AUSTRON has just started.

2. Accelerator complex

Figure 1 shows a schematic layout of the AUSTRON accelerator complex. The injection chain has two ion sources each with its own RFQ and these two sources feed into a common drift-tube linac. The rapid-cycling synchrotron (RCS) has a single injection insertion and a single extraction insertion. The injection insertion is for charge-exchange injection with negative hydrogen ions. The extraction insertion employs the classic scheme of a full-aperture fast kicker with a current-wall septum. The beam transport lines and the RCS are basically classical in design, but the operational requirements impose some demanding technological solutions. The injection line with a short dump line totals about 100 m. The RCS is 213 m in circumference and the various extraction lines total nearly 450 m in the final stage. The light ions are transferred after the linac to a dedicated medical accelerator with a slow extraction system for conformal cancer therapy.

The implementation of the AUSTRON spallation source is foreseen in two stages (the original AUSTRON I stage with only 100 kW is no longer considered):

AUSTRON II
Injection energy 130 MeV, a top energy of 1.6 GeV, 3.2 x 10^{13} particle/cycle, 25 Hz repetition rate, 205 kW (further improvement to 250 kW seems to be feasible) delivered to a single spallation target and the capability to accelerate light ions in the linac.

AUSTRON III
Injection energy of 130 MeV, a top energy of 1.6 GeV, 3.2 x 10^{13} particle/cycle, 50 Hz repetition rate, 410 kW (further improvement to 0.5 MW seems to be feasible). The doubling of the repetition rate will bring the machine elements to their design and technological limits.

Keywords: Neutron Source, Spallation Source, AUSTRON Project

The medical ring can be added at any stage. The light ions have a maximum nominal intensity of 5 x 10^8 ions/fill and a maximum nominal energy of 425 MeV/nucleon. Depending on the ion source and the injection system it may be possible to exceed the nominal intensity.

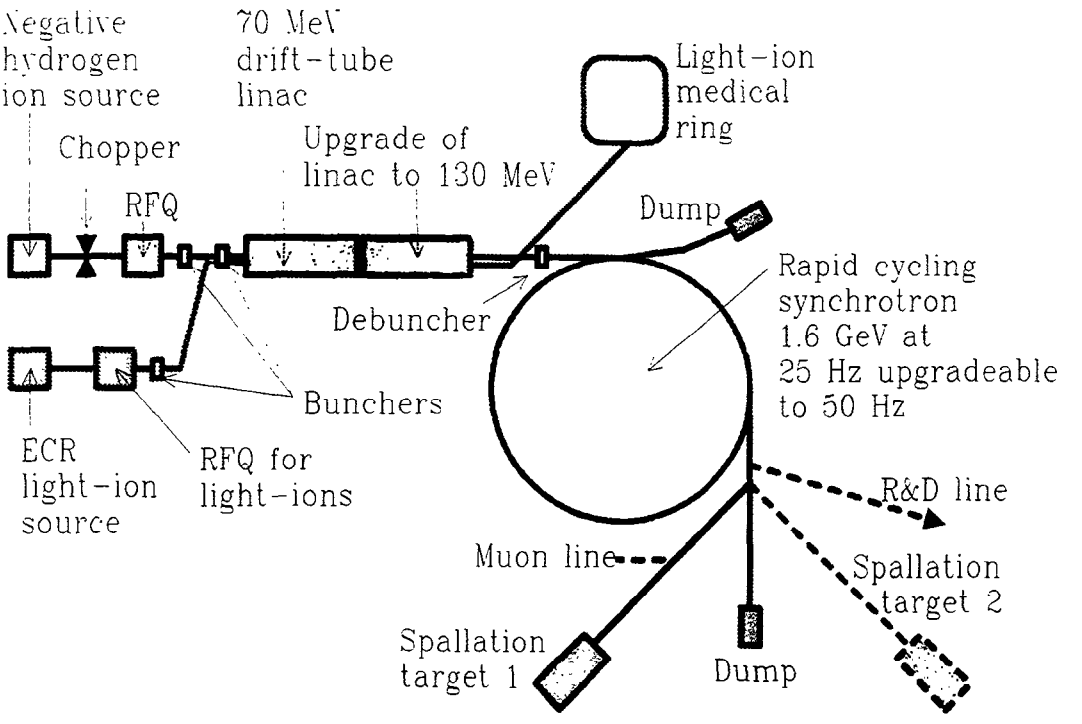

Figure 1 Schematic layout of the AUSTRON Facility

2.1 Injection chain

The drift-tube linac will be optimised to accelerate both negative hydrogen ions and light ions ('light' is defined as any ion up to neon, but carbon will probably be preferred). This has been demonstrated in the CERN linac, but the AUSTRON linac will be unique in being optimised for this purpose from the design stage. Only partially stripped light ions will be accelerated in the linac and, before injection into the RCS, these ions will be fully stripped by a foil in the transfer line. The extremely low intensity of the ion beam means that there is no problem with activation in the foil region, or with foil lifetime. In contrast, the negative hydrogen will be at a far higher intensity and the stripping foil in the RCS injection will become extremely active and will require remote handling equipment. Operation with the negative hydrogen ions is dominated by losses and activation at all stages. For this reason, 'chopping' is being considered after the RFQ. By physically chopping gaps in the beam that will overlap in the RCS, a pre-bunching of the beam is achieved before the RF is applied. This reduces the RF trapping losses and trades them for increased losses in the transfer line, but at a much lower energy so that the induced activity is reduced overall. A debunching cavity will be used to reduce the momentum spread of the beam to a minimum. Minimum momentum spread is essential if the chopping is to be efficient. To remove any halo generated in the linac and tails from the chopper, the beam will be collimated before injection to reduce uncontrolled losses on the injection equipment. There will also be full diagnostics for emittance measurements and an external dump for setting up the injection chain. Recent simulations of the injection and trapping process suggest that at 25 Hz the injection will be cleaner than assumed in the Feasibility Study and at 50 Hz the assumed losses can be respected or bettered.

In the final stage, the RCS will operate at 50 Hz. Although the main dipoles, main F-quadrupoles and main D-quadrupoles have separate resonant power supplies, the voltages on the coils will still be of the order of 10 kV to ground. For this reason, the coil surfaces will be coated with a conducting varnish and earthed to prevent corona discharge. The high voltages are necessary because the lattice is designed with a small number of superperiods customised for specific machine requirements, rather than having a large number of identical cells, as has been used in earlier machines of this type. The magnets will be laminated and have specially shaped ends to reduce eddy currents. Eddy currents are also a factor in the coil conductor design. The dipole magnets and their coils will be curved to follow the central beam trajectory. If this were not done it would be necessary to have much larger magnet apertures and higher power consumptions. The curved ceramic vacuum chambers for the dipoles also represent a considerable technological challenge. Particle losses will be a major preoccupation in the operation of the machine. At full intensity and 50 Hz, the radiation resistance of the coil insulation, the epoxy bonding between the laminations, the hoses etc. will be marginal with respect to the projected losses in some critical areas in the complex.

2.2 Extraction

The large aperture of the proton beam and the short rise time makes the extraction kicker a very substantial magnet. Extraction can also be lossy and at 1.6 GeV the particle losses are particularly critical. The first defence is to apply collimation just before extraction to remove any halo or tail caused by blow-up on non-linear resonances or by instabilities during acceleration. This will be achieved by making an extraction bump that brings the extracted beam against the limit set by the envelope of the beam at injection, both in the extraction straight section and in the following straight section where the betatron collimators will be mounted. In this way, the same collimators can be used at injection and then again before extraction, albeit with a slightly increased clearance and lower efficiency. The second defence will be preventative. The fast kicker will be pushed to its limit to provide the maximum clearance for the extraction septum. This space will then be used to increase magnetic shielding of the stray field from the current wall of the septum, since this can cause resonance excitation and beam loss.

2.3 Light-ion medical ring

The light-ion ring will have a circumference of about 70 m. The slow extraction from this ring will need to be stable and precise. This requirement will be the main design consideration.

3. The Target

In the feasibility study [1] two (only edge cooled) target designs with edge-cooling only [2] - a flat monolithic target and a cylindrical split target - for a 200 kW proton beam have been studied. The present aim is to make a target design capable of being loaded with a beam power of up to 0.5 MW and we try to improve the target (-reflector-moderator) efficiency [3] i.e. to increase the thermal neutron yield at the surface of the moderators.

The flat target concept is more appropriate for increased beam powers. This is because one can use a rather wide beam (large cross section) without loosing much of the efficiency of the target. Concerning the two designs simulated in the feasibility study the thermal load at the hottest spot of the split target is about 32 W/cm^3 whereas the corresponding number for the flat target is 12 W/cm^3 (200 kW proton beam). The beam intensity profile for the split target was

assumed to be of the Gaussian type with a standard deviation σ of 1.5 cm, for the flat target it was described according to

$$I(x,y) \propto \exp[-x^2/\sigma_x^2] \exp[-y^2/\sigma_y^2]$$

with $\sigma_x^2 = 20$ cm^2 and $\sigma_y^2 = 1.2$ cm^2. The corresponding maximum temperature rise during the proton pulse in the flat target is only about 2.5°C (200 kW proton beam, 25 Hz). Nevertheless a single flat target with edge cooling only does not seem to be a realistic target design due to the extensive stresses that will occur inside the target [1]. A possible solution to this problem might be to share the thermal load between two flat targets as shown in Fig. 2. This can be achieved by a switching magnet that directs the proton beam alternating to one of the two target plates. Thus such a system consists of two 25 Hz targets (each loaded with a proton beam up to 250 kW) with probably 3 moderators in between. Additional moderators can be placed above and below this sandwich-like system. Therefore there is a lot of space for various types of moderators (may be even coupled moderators for NAA and for irradiation of samples) that see basically (concerning the thermal load) only one 25 Hz target. Thus these 25 Hz moderator positions are especially suited for cold moderators. A major draw back of that system is that the high energy neutrons produced in both targets will generate significant cross talk in the 25 Hz moderators. Nevertheless considering the significant cost of a second target station it might be a reasonable first step target configuration for a 50 Hz, 0.5 MW machine. And after building a second target station (with a low frequency 10 Hz target) - as proposed in the feasibility study - it could be used as the high frequency (40 Hz) target.

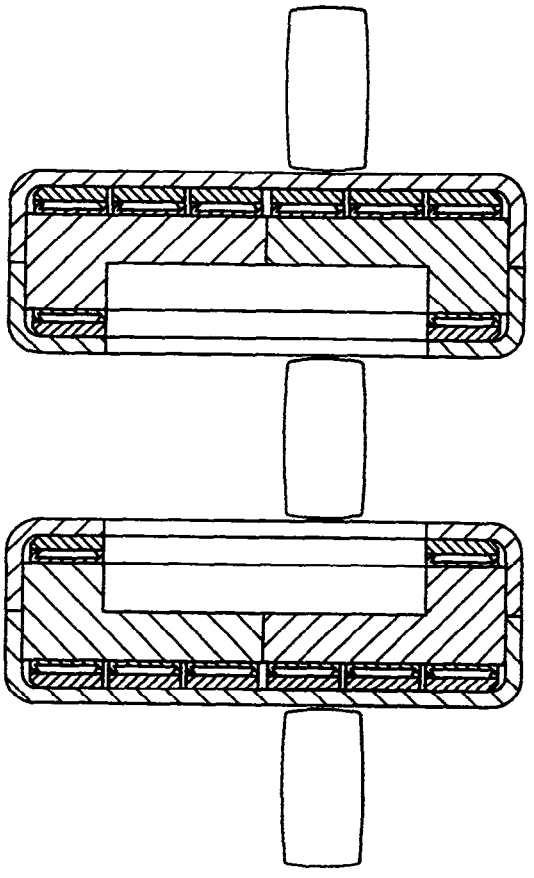

Figure 2 A schematic view of a sandwich like target system - two flat targets with three moderators

To improve the efficiency of the target a grooved flat target has been considered as shown in Fig. 3. This target design increases the area that provides high neutron flux for the moderators. This is indicated by the preliminary results of Monte Carlo simulations obtained so far.

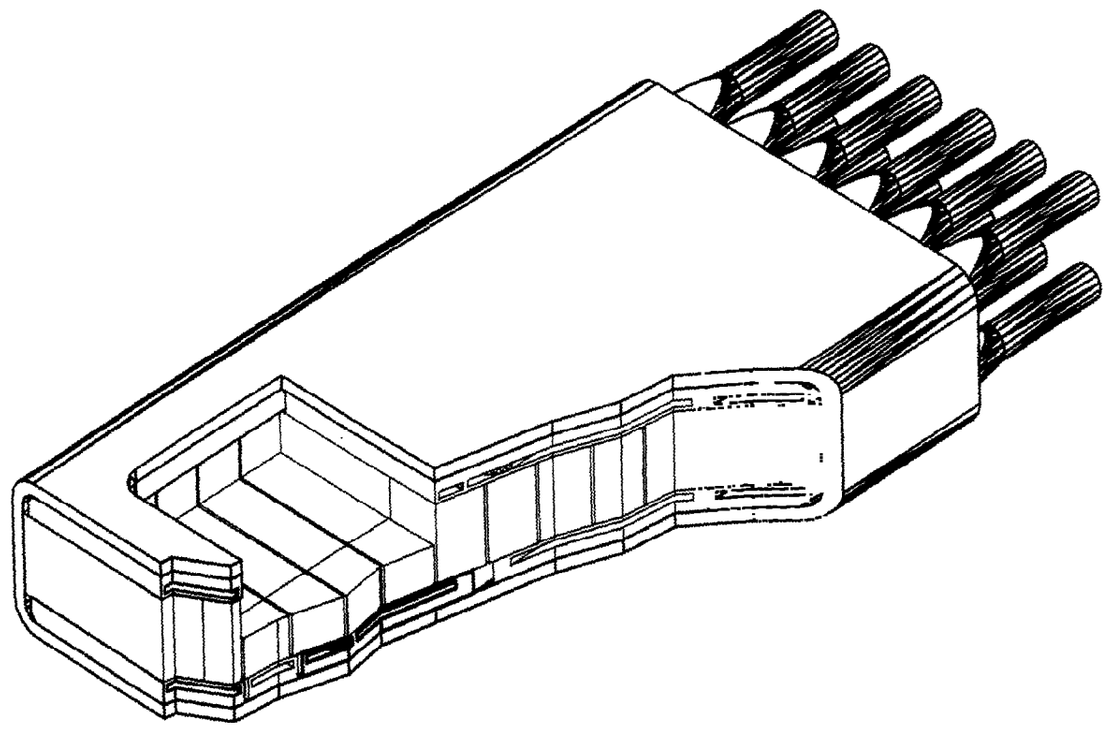

Figure 3 A grooved flat target (tarbet block: 60 x 30 x 6 cm^3)

4. Conclusion

It seems to be feasible to develop AUSTRON towards a 0.5 MW neutron spallation source with a thermal neutron flux which would be 2.5 to 3 times that of the ISIS facility which is currently best source in the world. In order to keep investment cost reasonably low one could consider starting with just one target station.

5. Acknowledgements

The authors would like to thank the Research Centre Seibersdorf for providing the drawings of the target designs.

5. Literature

[1] P. Bryant, M. Regler, M. Schuster eds. *AUSTRON Feasibility Study* (Austron Planning Office c/o Atominstitut, A-1020 Vienna, 1994)

[2] M. Schuster, J. Casta, R. Dobrozemsky, G. Muhrer, W. Ninaus, E. Schachinger, T. Schmeskal, I. Smid, G. Weimann, Physica B 213&214 (1995) 851

[3] G. Muhrer, W. Ninaus, E. Schachinger, „The AUSTRON-Target: The Neutron Flux of Decoupled an Poisoned Moderators", Proceedings of the ICANS XIII Meeting